Check for updates

Received: 30 March 2023 | Revised: 18 July 2023 | Accepted: 19 July 2023

DOI: 10.1111/ddi.13759

RESEARCH ARTICLE

Diversity and Distributions WILEY

Limited hybridisation and introgression despite stocking among endemic Interior Highlands black basses (Centrarchidae: *Micropterus*)

Joe C. Gunn[1] | Andrew T. Taylor[2] | Jeff J. Buckingham[3] | Aaron I. Kern[4] | James M. Long[5]

[1]Department of Plant and Soil Science, University of Vermont, Burlington, Vermont, USA

[2]Department of Biology, University of North Georgia, Dahlonega, Georgia, USA

[3]Black Bass Program, Arkansas Game and Fish Commission, Hot Springs, Arkansas, USA

[4]Arkansas Game and Fish Commission, Camden, Arkansas, USA

[5]U.S. Geological Survey, Oklahoma Cooperative Fish and Wildlife Research Unit, Department of Natural Resource Ecology and Management, Oklahoma State University, Stillwater, Oklahoma, USA

Correspondence
Joe C. Gunn, Department of Plant and Soil Science, University of Vermont, 216 Jeffords Hall, Burlington, VT 05401, USA.
Email: jcgunn@uvm.edu

Editor: Hanne De Kort

Abstract

Aim: Smallmouth Bass (*Micropterus dolomieu*; SMB) are globally popular among anglers and have been widely introduced (i.e. stocked) for population management and sportfishing. Importantly, stocking was prevalent before cryptic diversity within the SMB complex was known, which now includes three newly elevated species: Neosho Bass (*M. velox*; NB), Little River Bass (*M.* sp. cf. *dolomieu* Little River; LRB) and Ouachita Bass (*M.* sp. cf. *dolomieu* Ouachita River; OB). We sought to quantify population structure and hybridisation and introgression in these three recently described species.

Location: Species-level diversity, particularly in the basin-restricted LRB and OB in the Ouachita Mountains within the Central Interior Highlands (CIH), North America, suggests the presence of distinct genetic variation that could be eroded by introgression.

Methods: We estimated interspecific introgression and intraspecific population differentiation in the Smallmouth Bass species complex (SMB-C) using 472 specimens comprising SMB, NB, LRB and OB, including the naturally sympatric Spotted Bass (*M. punctulatus*; SPB). Genomic samples were genotyped on a SNP panel of 192 loci designed to detect allele-sharing on multiple hierarchical levels.

Results: We found low range-wide hybridisation between species in the SMB-C and SPB (mostly SMB-C backcrosses), and interspecific heterozygosity varied, indicating differential introgression. Range-wide hybridisation between species in the CIH and SMB was similar overall (but mostly F_2 and CIH backcrosses) and was observed in streams with known SMB stocking in connected reservoirs. Interspecific heterozygosity in SMB hybrids was also generally lower, indicating later-generation backcrosses. We found strong population structure in the Ouachita Mountains (LRB and OB).

Main Conclusions: Despite isolated incidences of natural (SPB) and human-mediated (SMB) introgression, genomic identity appears intact in endemic LRB and OB, suggesting potential ecological or behavioural isolating mechanisms preventing cross-species reproduction. Our findings reveal that genetic variation remains in cryptic,

This is an open access article under the terms of the Creative Commons Attribution License, which permits use, distribution and reproduction in any medium, provided the original work is properly cited.
© 2023 The Authors. *Diversity and Distributions* published by John Wiley & Sons Ltd.

basin-restricted species in the Ouachita Mountains ecoregion that may be managed for long-term conservation.

KEYWORDS
black basses, conservation, endemic species, fisheries management, hybridisation and introgression, SNPs, stocking

1 | INTRODUCTION

The first crucial steps in biological conservation are to identify lineages with evolutionarily significant variation (i.e. biodiversity), and then to understand the processes both generating and threatening diversity (Garrick et al., 2019; Jansson & Dynesius, 2002). Both steps are challenging if distinct taxa are cryptic, either due to recent diversification, plasticity or morphological convergence (Culver et al., 1995; Culver & Pipan, 2009; Schluter, 1996). Modern advancements in genetics have propelled the delimitation (and taxonomic elevation) of distinct lineages within species originally assumed to occupy large geographic ranges (e.g. Kim et al., 2021, 2022). In many cases, these species may be range-restricted by physical or ecological mechanisms and exhibit locally high fitness under extreme environmental conditions (Bickford et al., 2007; Funk et al., 2012; Niemiller et al., 2012). Disruption of local adaptations could have implications for long-term population viability and overall community diversity.

The black basses (Centrarchidae: *Micropterus*) have been prized as sportfishes in North America for two centuries (Long et al., 2015; USFWS, 2016), supporting a billion-dollar recreational fishing industry (Long et al., 2015). Federal, state, and private entities have conducted relatively unrestrained and pervasive stocking (i.e. introduction of wild-caught or hatchery-reared fishes *en masse* into streams or lakes) since the late 1800s (Long et al., 2015) to maximise angling opportunities or as a means of restoring small populations at risk of local extinction. Stocking was originally prescribed at a time when the genus was thought to comprise only two species: Largemouth Bass (*M. nigricans*) and Smallmouth Bass (*M. dolomieu*; Henshall, 1881). However, a recent surge of genetic inquiry has revealed cryptic diversity that was not fully characterised by earlier investigations using comparative morphology. Molecular analyses have resolved fine scale phylogeographical boundaries within some black basses, such as in the Redeye Bass (*M. coosae*) complex (Baker et al., 2013), and have led to the discovery of cryptic species (e.g. Choctaw Bass, *M.* sp. cf. *punctulatus*; Long et al., 2015; Taylor et al., 2019; Tringali et al., 2015).

Recent black bass surveys have focused on the freshwater endemism hotspot in the Central Interior Highlands (CIH; Borden & Krebs, 2009; Gunn et al., 2020, 2022; Soltis et al., 2006; Stark & Echelle, 1998; Taylor, Long, et al., 2018) spanning the Ouachita Mountains, Boston Mountains, and the lower Ozark Highlands of North America. Researchers have paid special attention to the Smallmouth Bass given its commercial popularity, complex phylogeographical history, and known occurrence of introductions within and outside the species' native distribution. Hubbs and Bailey (1940) first described two subspecies, the Neosho Smallmouth Bass (*M. d. velox*), inhabiting tributaries of the Arkansas River in the Ozark Highlands and Boston Mountains, and the Northern Smallmouth Bass (*M. d. dolomieu*), encompassing the remainder of the range from the central United States (USA) to southern Canada east of the Great Plains (Brewer & Orth, 2015). Hubbs and Bailey (1940) also proposed two 'intergrade zones', one within the White, Black and St. Francis River basins of southern Missouri and northern Arkansas, and one between the Red and Ouachita rivers in the Ouachita Mountains of south-eastern Oklahoma and south-western Arkansas. In a survey of 33 allozyme loci across samples collected in the CIH and some sites in the north-eastern USA, Stark and Echelle (1998) reaffirmed distinctions between the subspecies but suggested the 'intergrades' in the Ouachita Mountains represented a third genetic lineage, the Ouachita Smallmouth Bass (*M.* sp. cf. *dolomieu velox*), itself containing two distinct allopatric populations in the Ouachita River and Little River basins. Since then, black bass lineages in the CIH have been distinguished morphologically (Gunn et al., 2020), genetically (Bagley et al., 2011; Boxrucker et al., 2004; Gunn et al., 2020; Long et al., 2021; Taylor, Long, et al., 2018), and with high-throughput genomic sequencing (Gunn et al., 2022; Kim et al., 2022), culminating in the elevation of four new species, together constituting a monophyletic clade of Pleistocene origin (the Smallmouth Bass species complex; Kim et al., 2022): Smallmouth Bass (*M. dolomieu*), Neosho Bass (*M. velox*), Little River Bass (*M.* sp. cf. *dolomieu* Little River) and Ouachita Bass (*M.* sp. cf. *dolomieu* Ouachita).

Genomic variation in the Smallmouth Bass species complex is concentrated in the CIH (Kim et al., 2022). Despite this, stocking in parts of the region (Boxrucker et al., 2004; Stark & Echelle, 1998) has occurred with likely fitness consequences. Hybridisation and subsequent introgression of non-native ancestry may have significant consequences for the survival and reproduction of a recipient population, either through increased hybrid fitness (i.e. heterosis) leading to genetic swamping (Avise, 2010), or through the disintegration of genomic regions underlying environmental adaptation (i.e. outbreeding depression; Altukhov & Salmenkova, 1987). Hybridisation between Smallmouth Bass and Neosho Bass has been recently reported (Gunn et al., 2020, 2022; Taylor, Long, et al., 2018), and extensive introgression has been attributed directly to stocking in upstream portions of the Illinois River following introduction of hatchery-reared Smallmouth Bass ('Tennessee Lake-strain',

14724642, 2023, 10, Downloaded from https://onlinelibrary.wiley.com/doi/10.1111/ddi.13759 by Ohio State University University Libraries, Wiley Online Library on [26/03/2026]. See the Terms and Conditions (https://onlinelibrary.wiley.com/terms-and-conditions) on Wiley Online Library for rules of use; OA articles are governed by the applicable Creative Commons License

Cumberland River, Tennessee) into Lake Tenkiller, Oklahoma in 1991–1992 (Gunn et al., 2020, 2022; Taylor, Long, et al., 2018). Tennessee Lake-strain Smallmouth Bass were concurrently stocked in Broken Bow Lake, Oklahoma, within the native range of the Little River Bass (Boxrucker et al., 2004), and later into Lake Ouachita, Arkansas in 2004 (Port et al., 2021) within the native range of the Ouachita Bass, after stocking of native Ouachita Bass failed to produce a viable fishery in the reservoir. However, the relative newness of species delimitation and suspected but poorly documented historical stockings in the region suggest that some unreported introgression may exist in these species.

Ouachita Bass and Little River Bass have been isolated in separate basins in the Ouachita Mountains for millennia and are adapted to local ecosystem dynamics. Given their genomic divergence (Kim et al., 2022) and allopatric ranges, these species likely exhibit unique ecologies, for example, habitat requirements, diet, ecophysiology and behaviour. Experts have reviewed the life history traits of Smallmouth Bass (Brewer & Orth, 2015) and Neosho Bass (Brewer & Long, 2015); however, apart from one recent study finding elevated critical thermal maximum in Ouachita Bass compared to Neosho Bass (Brewer et al., 2022), differences across the entire Smallmouth Bass species complex have not been fully described. Known characteristics of the Ouachita Mountains ecoregion may contribute to ecological differentiation. The Ouachita Mountains are geologically and ecologically diverse and contain at least 10 endemic fishes (Mayden, 1985) that are confined to small runoff streams (Hafs et al., 2010) and thus subjected to extreme variability in abiotic (e.g. flow regimes, water temperatures and suitable habitat; Hines, 1975; Homan et al., 2005) and biotic (competition and predation; Gagen et al., 1998; Harvey & Stewart, 1991) conditions.

The presence of potentially strong local adaptation in the Ouachita Mountains could mean that populations are vulnerable to the deleterious effects of outbreeding. However, data on hybridisation, introgression, and genetic structure are limited across the range. Admixture may be widespread in these species, either through anthropogenic (i.e. stocking) or presently unknown natural (e.g. periodic flooding, stream capture or ground water flow) mechanisms. Furthermore, global change, including rise in average water temperature and industrial development, may affect ecological systems in ways that create new opportunities for species, allopatric or sympatric, to hybridise. Little River Bass and Ouachita Bass are naturally sympatric with at least one closely related congener (Spotted Bass, *M. punctulatus*); while prezygotic reproductive isolation would be expected to minimise hybridisation between species evolved in natural sympatry, other species in the Smallmouth Bass species complex interbreed readily with Spotted Bass (Avise et al., 1997; Koppelman, 1994). Assessing levels of introgressive hybridisation is critical to understanding whether presumed local adaptations can overcome or protect against propagule pressure associated with mixing non-native forms.

We used a low-density diagnostic panel of 192 SNPs (Long et al., 2021) to conduct a range-wide genetic survey of the Smallmouth Bass species complex and to test for hybridisation and introgression due to stocking in the Little River Bass and Ouachita Bass in the CIH. We included Smallmouth Bass, Neosho Bass (Gunn et al., 2020; Long et al., 2021; Taylor, Long, et al., 2018) and Spotted Bass (a closely related outgroup), to assess levels of natural and human-mediated hybridisation and introgression based on shared allelic composition. We expected strong genetic structure differentiating Little River Bass and Ouachita Bass, as suggested by allozyme-based analyses conducted over 25 years ago by Stark and Echelle (1998). Finally, we hypothesised that some Little River Bass and Ouachita Bass stream populations would exhibit substantial introgression with non-native Smallmouth Bass, at least in areas with historic stocking.

2 | METHODS

2.1 | Sample collection

We collected fin clips from all major river drainages spanning the currently recognised native ranges of two species within the Smallmouth Bass species complex (SMB-C) in the Ouachita Mountains (Kim et al., 2022): Ouachita Bass (*Micropterus* sp. cf. *dolomieu* Ouachita River; OB) and Little River Bass (*M.* sp. cf. *dolomieu* Little River; LRB). Samples were collected between 2014 and 2018 from four native OB streams in the Ouachita River basin and nine native LRB streams within the Little River basin (Table 1; Figure 1a,b). We included stream sites adjacent to all large impoundments, including Broken Bow Lake in Oklahoma, USA, and Lake Greeson, Lake DeGray and Lake Ouachita in Arkansas, USA; additionally, we included samples from one tributary of the Arkansas River basin (Black Fork of the Poteau River; Table 1; Figure 1b) that had been previously stocked with broodfish originating from the Little River basin (Stark & Echelle, 1998).

To assess hybridisation and introgression of OB and LRB with allopatric Neosho Bass (*M. velox*; NB) and introduced Smallmouth Bass (*M. dolomieu*; SMB), we used reference samples of SMB, which had been previously screened for non-native ancestry from Spotted Bass (*M. punctulatus*; SPB) and NB, which had been previously screened for non-native ancestry from SMB and SPB (2015–2018; Gunn et al., 2020; Long et al., 2021; Taylor, Long, et al., 2018). Briefly, NB samples were collected from five native streams in the Arkansas River basin whereas SMB samples were collected from three native lentic populations (Lake Superior, Lake Erie, and Oneida Lake, New York, USA), one native lotic population (Smith Fork Creek, Tennessee, USA), and one non-native impoundment in Oklahoma (Skiatook Lake) that was stocked in 1991–1992 with hatchery-reared fish from the Cumberland River drainage (Tennessee Lake-Strain; Figure 1b). To assess natural hybridisation with a sympatric congener, we also obtained a genetically pure reference set of SPB from the Illinois River and Glover River in the Arkansas River basin (Table 1). For all samples, fish were captured by hook-and-line angling or boat electrofishing (Long et al., 2021), visually identified to species, and ~1 cm^2 of tissue from the upper caudal fin was removed with sterile clippers and stored in 95% ethanol at −20°C until processing.

14724642, 2023, 10, Downloaded from https://onlinelibrary.wiley.com/doi/10.1111/ddi.13759 by Ohio State University University Libraries, Wiley Online Library on [26/03/2026]. See the Terms and Conditions (https://onlinelibrary.wiley.com/terms-and-conditions) on Wiley Online Library for rules of use; OA articles are governed by the applicable Creative Commons License

TABLE 1 Species, stream or lake 'population', site, latitude and longitude, and sample sizes (*n*) for 484 black bass collected from across the Interior Highlands, including Spotted Bass (*Micropterus punctulatus*; SPB), Smallmouth Bass (*M. dolomieu*; SMB), Neosho Bass (*M. velox*; NB), Little River Bass (*M.* sp. cf. *dolomieu* Little River; LRB) and Ouachita Bass (*M.* sp. cf. *dolomieu* Ouachita River; ORB).

Species	Population	Site	Latitude (in/out)	Longitude (in/out)	n_{used} ($n_{filtered}$)
SPB	Illinois River	1	35.836227	−94.91812	3 (3)
	Glover River	2	34.314266 34.308777	−94.937476 −94.935704	2
				Total SPB	5 (3)
SMB	Lake Superior	3	46.662317 46.591845	−90.696177 −90.888956	4
	Lake Erie	4	41.477460 41.475390	−82.184080 −82.190370	4
	Oneida Lake	5	43.172500 43.188889	−75.908611 −75.810833	4
	Smith Fork Creek	6	36.034261 36.034261	−85.938346 −85.938346	4
	Skiatook Lake	7	36.328132	−96.127863	7 (1)
				Total SMB	23 (1)
NB	Honey Creek	8	36.551242 36.547813	−94.650555 −94.722284	10
	Spavinaw Creek	9	36.324321 36.321305	−94.699308 −94.713257	9 (1)
	Baron Fork	10	35.936556 35.894349	−94.827673 −94.863118	10
	Caney Creek	11	35.841508 35.841145	−94.772695 −94.789427	9 (1)
	Lee Creek	12	35.584528 35.545124	−94.503106 −94.518035	9 (1)
				Total NB	47 (3)
LRB	Blackfork Creek	13	34.765097 34.777525	−94.495429 −94.539292	34
	Honobia Creek	14	34.570990 34.547910	−94.937647 −94.932839	23
	Little River	15	34.531537	−94.932874	5
	Glover River	16	34.314266 34.094502	−94.937476 −94.902679	52 (3)
	Big Eagle Creek	17	34.523480	−94.720450	3
	Upper Mountain Fork	18	34.486730 34.395220	−94.514460 −94.687390	35 (2)
	Mountain Fork	19	34.065681	−94.623094	15
	Pero Creek	20	34.083894	−94.490357	1
	Cossatot River	21	34.375596 34.183401	−94.235984 −94.241398	33
	Western Saline River	22	34.359506 34.208771	−94.028073 −94.054847	37
				Total LRB	238 (5)
OB	Little Missouri River	23	34.376860 34.102131	−93.884226 −93.715555	39
	Caddo River	24	34.453439 34.290528	−93.682309 −93.459236	40
	Ouachita River	25	34.575734 34.637853	−94.000442 −93.683028	40
	Eastern Saline River	26	34.613088 34.656168	−92.780718 −92.634278	40
				Total OB	159 (0)

Note: n_{used} indicates the number of samples retained for analysis; $n_{filtered}$ indicates the number of samples omitted in filtering steps. Top latitude and longitude coordinates indicate the northernmost collection site; bottom coordinates indicate the southernmost collection site. In sites with only one latitude and longitude coordinate, all samples were collected from a single location.

14724642, 2023, 10, Downloaded from https://onlinelibrary.wiley.com/doi/10.1111/ddi.13759 by Ohio State University University Libraries, Wiley Online Library on [26/03/2026]. See the Terms and Conditions (https://onlinelibrary.wiley.com/terms-and-conditions) on Wiley Online Library for rules of use; OA articles are governed by the applicable Creative Commons License

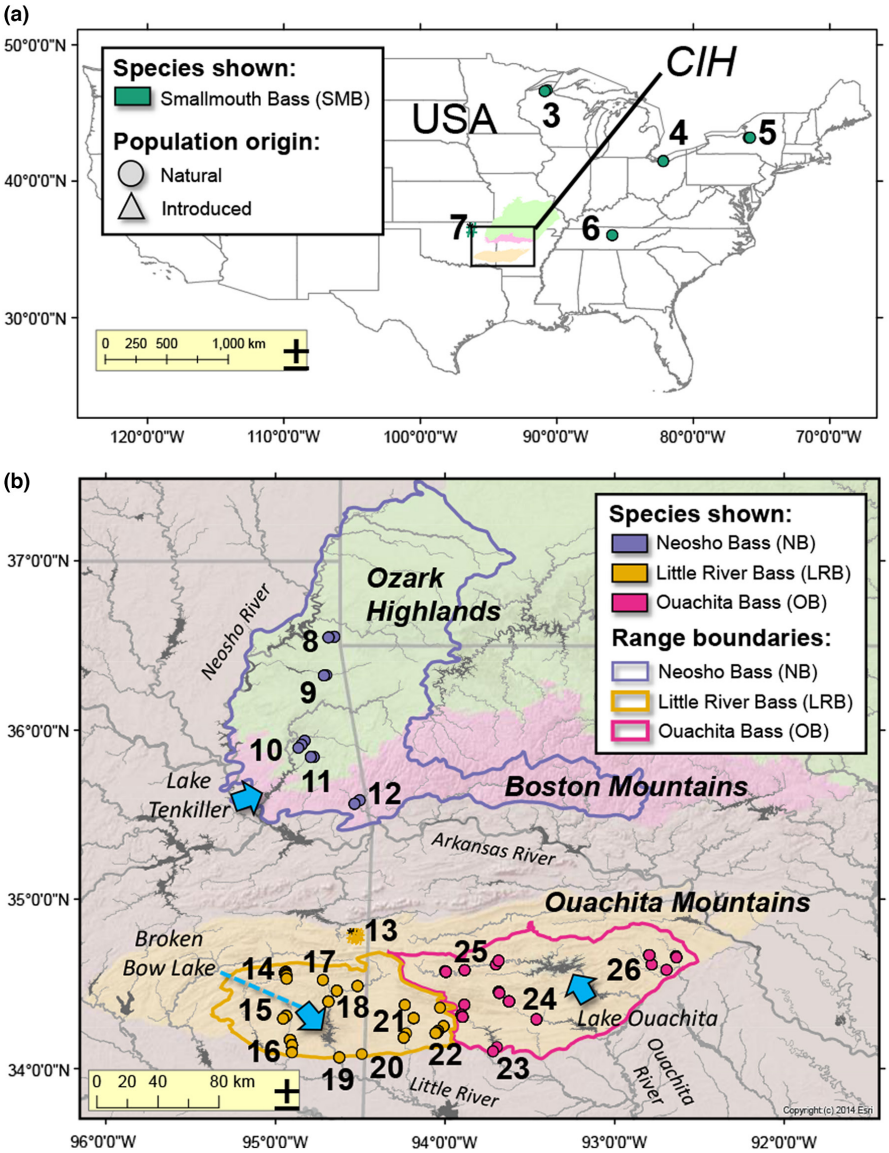

FIGURE 1 Map of the study area and species sampled, including (a) Smallmouth Bass (*Micropterus dolomieu*, SMB, dark green) collected from natural (circles) and introduced (triangles) populations across the native range in the USA and Central Interior Highlands (CIH; sites 3–7); and (b) species endemic to the CIH, including Neosho Bass (*M. velox*, NB, purple, sites 8–12), Little River Bass (*M.* sp. cf. *dolomieu* Little River, LRB, yellow, sites 13–22), and Ouachita Bass (*M.* sp. cf. *dolomieu* Ouachita River, OB, dark pink, sites 23–26). Major ecoregion boundaries (Ozark Highlands, light green; Boston Mountains, light pink; and Ouachita Mountains, light yellow) are shaded and labeled in bold. Three impoundments with known stocking histories (Lake Tenkiller, OK, Broken Bow Lake, OK, and Lake Ouachita, AR) are labeled and indicated by blue arrows, and major rivers are labeled. Sites are numbered as in Table 1. Sites for Spotted Bass (*M. punctulatus*; SPB) are not shown but are listed as Sites 1 and 2 in Table 1.

2.2 | DNA extraction, quality assessment, genotyping and filtering

Fin clips were sent to the Center for Aquaculture Technologies (CAT) for DNA extraction, quality assessment and sequencing. DNA extractions were performed on ~15 mg pieces of tissue using a standardised magnetic bead-based extraction protocol (CAT), and eluted samples were arranged randomly on 96-well plates. For quality control, 10–12 samples were selected from each plate, quantified on a Nanodrop spectrophotometer and screened for low yield and gDNA degradation on a 2% agarose gel (50–100 μL at ~30 ng/μL).

DNA samples were amplified following established guidelines using Kompetitive Allele Specific Polymerase Chain Reaction (KASP) technology (LGC Genomics). All samples were genotyped on a low-density SNP panel designed to determine allelic ancestry and multi-generation hybrids among black bass species in the SMB-C and CIH (Figure 2a). The panel consisted of 192 SNPs derived from restriction enzyme associated DNA sequencing (RADseq) of 76 black bass individuals representing SPB, SMB, NB, OB and LRB. Three distinct sets of SNPs were selected, each maximising genomic differentiation among species on three hierarchical levels (Long et al., 2021): (1) SPB versus all four species in the SMB-C (*SPB-SNPS*; Figure 2b); (2) SMB versus all species native to the CIH (*SMB-SNPS*; Figure 2c); and (3) NB versus OB versus LRB across basins in the CIH (*CIH-SNPS*; Figure 2d). Simulation analyses of this SNP panel demonstrated >80% power to distinguish among hybrid classes (F_1, F_2 and first-generation backcrosses; Long et al., 2021).

Genotypes inferred from KASP assays were filtered for quality at CAT based on clustering characteristics in *SNPViewer* (LGC Biosearch Technologies). To increase dataset quality further while retaining maximum numbers of loci and samples, we omitted loci with greater than 20% missing genotype call rate across the global sample set and subsequently omitted samples with greater than 20% missing genotype call rate across all filtered loci. We assessed potential inference bias due to missing genotypes (i.e. due to non-random genotyping error among genetic groups of interest) using discriminant

14724642, 2023, 10, Downloaded from https://onlinelibrary.wiley.com/doi/10.1111/ddi.13759 by Ohio State University University Libraries, Wiley Online Library on [26/03/2026]. See the Terms and Conditions (https://onlinelibrary.wiley.com/terms-and-conditions) on Wiley Online Library for rules of use; OA articles are governed by the applicable Creative Commons License

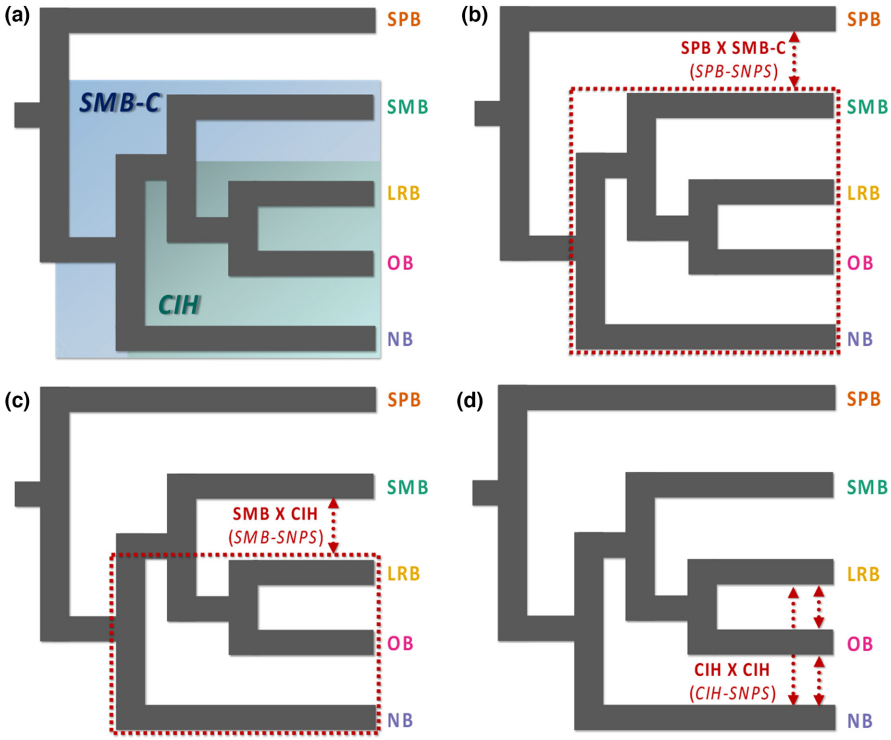

FIGURE 2 Schematic of hybridization analysis for (a) black bass species (Spotted Bass, *Micropterus punctulatus*, SPB; Smallmouth Bass, *M. dolomieu*, SMB; Little River Bass, *M.* sp. cf. *dolomieu* Little River, LRB; Ouachita Bass, *M.* sp. cf. *dolomieu* Ouachita River, OB; and Neosho Bass, *M. velox*, NB) in the Smallmouth Bass species complex (SMB-C) and Central Interior Highlands (CIH). Analyses were conducted on three hierarchical levels using three distinct sets of SNP loci: (b) SPB versus all other species in the SMB-C using SPB- and SMB-C diagnostic SNPs (*SPB-SNPS*); (c) SMB versus all other species in the CIH using SMB- and CIH-diagnostic SNPs (*SMB-SNPS*) and (d) among species in the CIH using SNPs diagnostic for species in the CIH (*CIH-SNPS*).

analysis of principal components (DAPC; Jombart et al., 2010) in R *v*.4.2.2 (R Core Team, 2022) through the package *adegenet v*.1.3.1 (Jombart, 2008; Jombart & Ahmed, 2011). To detect bias in each hierarchical analysis (SPB vs. SMB-C with *SPB-SNPS*; SMB vs. CIH with *SMB-SNPS*; CIH with *CIH-SNPS*), we compared linear discriminant (LD) loadings of genetic groups from two rounds of DAPC, one for all data including missing genotypes, and one for all data excluding missing genotypes. Number of principal components (PCs) retained for each round was the number at which cumulative variance curves began to plateau, and one LD was retained for visualisation. Finally, we screened for duplicated individuals (e.g. if collected on multiple occasions) by calculating pairwise per cent identity between samples, and we omitted samples exceeding 95% identity.

2.3 | Hybridisation and population structure in the Smallmouth Bass species complex (SMB-C)

We estimated species-specific ancestry proportions using Bayesian clustering analysis in Structure *v*.2.3.4 (Pritchard et al., 2000), and we identified individuals of hybrid origin using Bayesian assignment analysis in NewHybrids *v*.1.1b (Anderson & Thompson, 2002). First, we used *SPB-SNPS* to infer ancestry and hybridisation between SPB and all species in the SMB-C, including the NB reference set. To eliminate ancestry bias in downstream analyses, pure SPB and hybrids were then omitted from the dataset. Second, we used *SMB-SNPS* to infer ancestry and hybridisation between SMB and all other species in the CIH, including remaining NB reference individuals. SMB and inferred hybrids were then omitted from downstream analysis. Last, we used *CIH-SNPS* to infer ancestry and hybridisation among remaining NB, LRB, and OB. Since *CIH-SNPS* were optimised to differentiate among basins across the three CIH species (Long et al., 2021), we ran ancestry analysis in Structure for all three species simultaneously. On the other hand, the NewHybrids algorithm uses allele frequency differentiation to infer two 'parent' species from which interspecific alleles are derived in hybrids. Thus, we ran three separate analyses using the full SNP set to infer hybrids of each species pair: NB and LRB, NB and OB, and LRB and OB. Missing genotypes were ignored in all analyses.

For each analysis in Structure, we used the admixture model with no prior for location and ran 500,000 burn-in steps and 1,000,000 Markov chain Monte Carlo (MCMC) iterations for 10 replicates at each a priori number of clusters (*K*). Values of *K* were set based on the number of stream sites represented in the data. We determined optimal *K* using the delta*K* metric (Evanno et al., 2005) implemented in *R* with the package *pophelper v*.2.3.1 (Francis, 2017). We additionally inferred optimal *K* using Puechmaille metrics (Puechmaille, 2016) implemented in the online software structure selector (Li & Liu, 2018); these metrics are especially useful when individuals can be a priori grouped into geographically meaningful 'subpopulations' (in our case, rivers), and they are robust to uneven sample sizes (Puechmaille, 2016). For optimal *K*, we processed raw structure replicates in Clumpp *v*.1.1.2 (Jakobsson et al., 2013) using the *LargeKGreedy* algorithm with 10,000 random permutations.

For corresponding analysis in NewHybrids, we classified individuals into one of six hybrid categories (Parent 1 [non-hybrid], Parent 2 [non-hybrid], F_1 hybrid, F_2 hybrid, Backcross to Parent 1 or Backcross to Parent 2). We implemented each analysis in the *R* package *parallelnewhybrid v*.1.01 (Wringe et al., 2017), running

14724642, 2023, 10, Downloaded from https://onlinelibrary.wiley.com/doi/10.1111/ddi.13759 by Ohio State University University Libraries, Wiley Online Library on [26/03/2026]. See the Terms and Conditions (https://onlinelibrary.wiley.com/terms-and-conditions) on Wiley Online Library for rules of use; OA articles are governed by the applicable Creative Commons License

100,000 burn-in steps and 500,000 sweeps. Resulting posterior probabilities of assignment to each hybrid category for all individuals were visualised in *R*. Individuals were identified as likely hybrids if they were assigned with greater than 50% posterior probability to any of four hybrid categories (F_1, F_2, Backcross to Parent 1, Backcross to Parent 2); this threshold was chosen based on a previous power analysis showing relatively high power to detect hybrids regardless of category or number of SNP loci (Long et al., 2021). All input data for STRUCTURE and NEWHYBRIDS were converted from *GenePop* format using the *R* package *genepopedit v*.1.0.0.6 (Stanley et al., 2017).

2.4 | Introgression in the Smallmouth Bass species complex (SMB-C)

We further assessed the extent of allelic introgression in hybrids using regression analysis in the *R* package *introgress* (Gompert & Buerkle, 2010). For each hybrid individual, we compared hybrid index (proportion of the genotype contributed by one of two parental populations) with interspecific heterozygosity (proportion of heterozygous genotypes in which each allele is derived from a different parental population). F_1 hybrids are expected to have equivalent allelic contributions from both parents ($q=0.5$) and relatively high interspecific heterozygosity. Later generation hybrids (i.e. F_2, F_3, etc.) and backcrosses vary in parental contribution and interspecific heterozygosity, and evaluating the relationship between these variables allows inference of the magnitude and directionality of gene flow between populations.

For each hybrid comparison (SPB vs. SMB-C, SMB vs. CIH, and CIH vs. CIH), all individuals in the dataset were assigned to one of three groups based on identification in NEWHYBRIDS analysis: (1) 'Parent 1' (individuals identified as Parent 1 in NEWHYBRIDS); (2) 'Parent 2' (individuals identified as Parent 2); or (3) 'Admixed' (individuals identified as either F_1, F_2 or backcrossed hybrids). We used the *prepare.data* function to compute counts of alleles derived from each 'Parent' population across loci (*SPB-SNPS*, *SMB-SNPS* or *CIH-SNPS*) and then used Bayesian computation with the *est.h* function to calculate hybrid index. Finally, we calculated interspecific heterozygosity using the *calc.intersp.het* function. We regressed interspecific heterozygosity on hybrid index and visualised regressions as triangle plots in *R*.

3 | RESULTS

3.1 | Sample collection, genotyping and filtering

We collected 402 SMB-C samples from OB ($n=159$) and LRB ($n=243$) in the Ouachita Mountains (Table 1; Figure 1b). We collected additional 'reference' SMB-C samples from NB in the CIH ($n=50$) and SMB from native and introduced populations ($n=24$), and we obtained samples of naturally sympatric SPB ($n=8$; Table 1; Figure 1a,b). All samples ($n=484$) were genotyped at 192 diagnostic SNPs (Long et al., 2021).

After filtering, the total dataset ($n=472$) consisted of all five species: SPB ($n=5$), SMB ($n=23$), NB ($n=47$), LRB ($n=238$), and OB ($n=159$; Table 1). Samples were genotyped at 186 SNPs, including *SPB-SNPS* ($n=15$), *SMB-SNPS* ($n=33$), and *CIH-SNPS* ($n=138$).

Mean missing genotype call rate across the global dataset (1.04%) was low for loci (0.00%–11.65%) and for samples (0.00%–19.89%) after removing six poor quality loci (Figure S1a), six poor quality samples (Figure S1b), and six samples representing likely duplicates. Mean missingness rates within hierarchical groups were low but varied between SPB (5.33%; 0.00%–13.33%) and SMB-C (0.52%; 0.00%–13.33%); between SMB (3.16%; 0.00%–12.12%) and CIH (0.41%; 0.00%–12.12%); and among NB (3.78%; 0.00%–23.91%), OB (1.09%; 0.00%–12.32%), and LRB (0.61%; 0.00%–2.90%). However, DAPC showed no differential clustering of LD1 loadings between datasets including or excluding missing genotypes for SPB versus SMB-C (Figure S1a,b), SMB versus CIH (Figure S1c,d) or among NB, OB and LRB (Figure S1e,f).

3.2 | Hybridisation, introgression and population structure in the Smallmouth Bass species complex (SMB-C)

Scanning the full dataset for ancestry proportions and hybridisation between SPB and species in the SMB-C (*SPB-SNPS*), we found strong support for $K=2$ genetic clusters using both deltaK ($\Delta K=12{,}975.06$; Table S1) and Puechmaille (*MedMedK*=2, *MedMeanK*=2, *MaxMedK*=2, *MaxMeanK*=2; Table S2) metrics, with SPB individuals assigning mostly to one cluster ($q_{ave}=0.99$) and SMB-C individuals assigning mostly to a second cluster ($q_{ave}=0.98$; Figure 3a; Figure S2a). We found no evidence of SPB introgression in SMB sites (Table 2). Conversely, we detected 26 multigeneration hybrids (frequency across species of ~0.06) distributed across NB ($n=2$), LRB ($n=22$), and OB ($n=2$) streams (Table 2), all of which were either backcrossed to SMB-C or F_1 hybrids. In NB, we found a single SMB-C backcross in Honey Creek and a single F_1 hybrid in Lee Creek. In the LRB native range, most hybrids were found in Glover River (SMB-C backcrosses, $n=5$) and Western Saline River (SMB-C backcrosses, $n=9$). Additional SMB-C backcrosses were found in the Little River ($n=1$), Upper Mountain Fork ($n=2$), and the mainstem of Mountain Fork ($n=2$). We found one F_1 hybrid in Blackfork Creek. In OB, we found two SMB-C backcrosses in Eastern Saline River (Table 2; Figure S2a).

After removing SPB hybrids from the full dataset, we assessed hybridisation between SMB and all other CIH species (*SMB-SNPS*). We found strong support for $K=3$ using the deltaK metric ($\Delta K=1042.10$; Table S3) and $K=4$ using Puechmaille metrics (*MedMedK*=4, *MedMeanK*=4, *MaxMedK*=4, *MaxMeanK*=4; Table S4). Individual ancestry proportions were highly variable among NB, LRB and OB populations in the CIH for both $K=3$ and $K=4$, with no consistent clustering patterns (Figure S3a,b). We

14724642, 2023, 10, Downloaded from https://onlinelibrary.wiley.com/doi/10.1111/ddi.13759 by Ohio State University University Libraries, Wiley Online Library on [26/03/2026]. See the Terms and Conditions (https://onlinelibrary.wiley.com/terms-and-conditions) on Wiley Online Library for rules of use; OA articles are governed by the applicable Creative Commons License

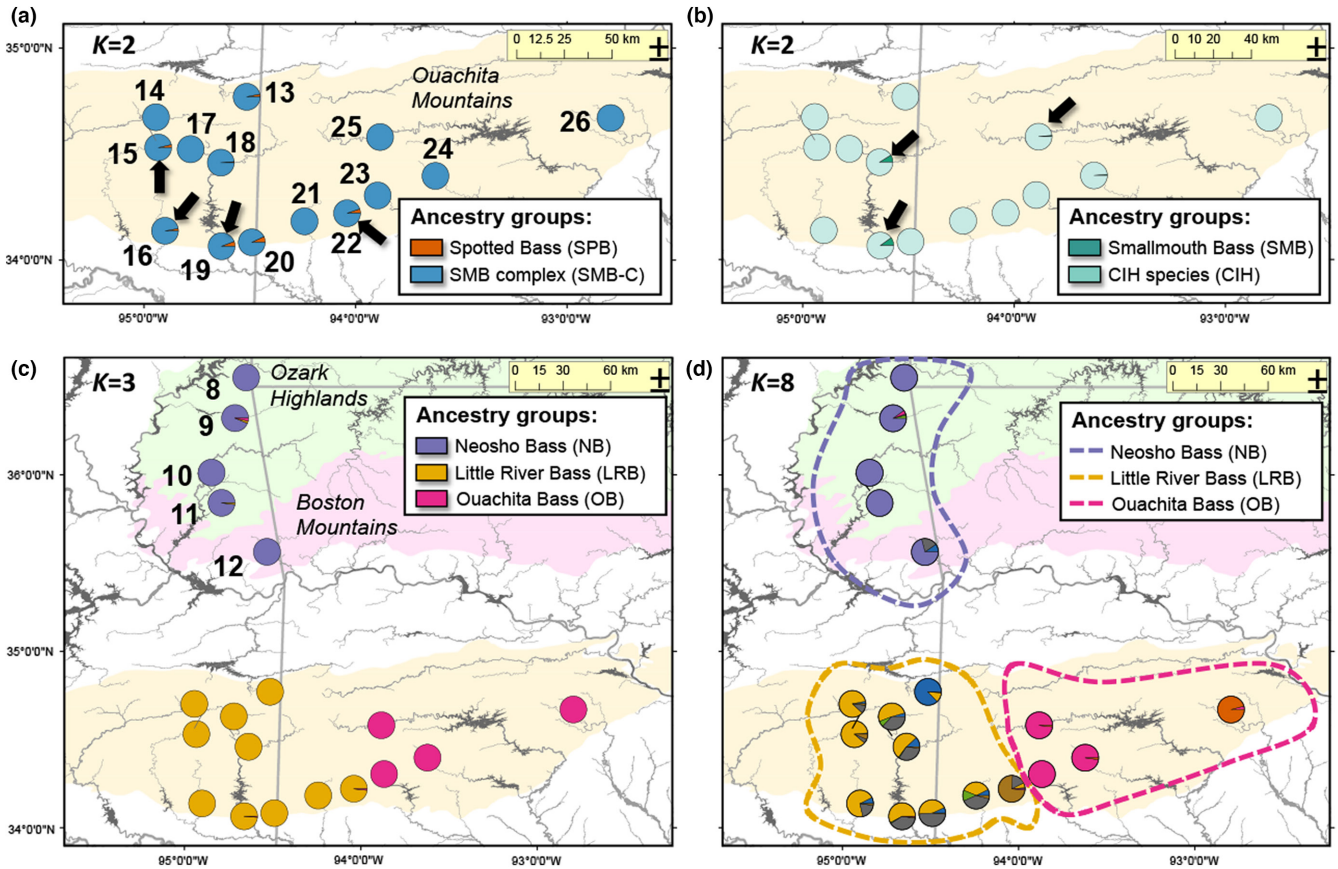

FIGURE 3 Ancestry proportions inferred in STRUCTURE for (a) species in the Ouachita Mountains ecoregion using diagnostic SNPs for Spotted Bass (*Micropterus punctulatus*; SPB) and the Smallmouth Bass species complex (SMB-C; *SPB-SNPS*) at $K=2$ optimal ancestry groups; (b) species in the Ouachita Mountains using diagnostic SNPs for Smallmouth Bass (M. dolomieu; SMB) and species native to the Central Interior Highlands (CIH; *SMB-SNPS*) at $K=2$ optimal ancestry groups; (c) species in the CIH using diagnostic SNPs for species native to the CIH (*CIH-SNPS*) at $K=3$ optimal ancestry groups (deltaK metric) and (d) species in the CIH using *CIH-SNPs* at $K=8$ optimal ancestry groups (Puechmaille metrics). Ancestry proportions are not shown for SPB, SMB or Neosho Bass (*M. velox*; NB) collection sites for analyses with *SPB-SNPS* (a) or *SMB-SNPs* (b), because these samples were pre-screened for non-native SPB or SMB ancestry and were used for assessing structure in the Ouachita Mountains. Thus, ancestry groups are denoted by color to distinguish genomic contributions from SPB and SMB, respectively. Ancestry proportions are shown for collection sites in all three species native to the CIH, including NB, Little River Bass (M. sp. cf. dolomieu Little River; LRB), and Ouachita Bass (M. sp. cf. dolomieu Ouachita River; ORB), for analysis with *CIH-SNPS* (c and d). Sites are numbered as in Table 1; sites within the Ouachita Mountains are labeled in (a) and sites within the Ozark Highlands are labeled in (b). Black arrows indicate sites with relatively high proportions of hybridization and introgression. Colored dotted lines in (d) are drawn approximately around the distribution of each species in the CIH.

therefore visualised ancestry proportions at $K=2$. All SMB individuals confidently assigned to a single cluster ($q_{ave}=0.99$), and all CIH individuals assigned mostly to another cluster ($q_{ave}=0.98$; Figure 3b; Figure S2b). We found 22 SMB hybrids (~0.05) distributed across NB ($n=5$), LRB ($n=15$), and OB ($n=2$), all of which were either backcrossed to CIH or F_2 hybrids (Table 3). Again, most hybrids in the LRB were in Upper Mountain Fork (F_2, $n=3$; CIH backcrosses, $n=5$) and in the mainstem of Mountain Fork (F_2, $n=1$; CIH backcrosses, $n=6$). In the NB range, we found one CIH backcross in Honey Creek, three CIH backcrosses in Spavinaw Creek and one CIH backcross in Baron Fork. Both hybrids in the OB native range were detected in the Ouachita River (Table 3; Figure S2b).

After removing SMB from the dataset and assessing hybridisation among CIH species (*CIH-SNPS*), we found support for $K=3$ genetic clusters using deltaK ($\Delta K=24{,}187.47$; Table S5) and $K=8$ genetic clusters using Puechmaille metrics (*MedMedK*=8, *MedMeanK*=8, *MaxMedK*=8, *MaxMeanK*=8; Table S6). At $K=3$, individuals clustered by species, with all NB individuals assigning mostly to one cluster ($q_{ave}=0.98$), all LRB individuals assigning mostly to a second cluster ($q_{ave}=0.99$), and all OB individuals assigning mostly to a third cluster ($q_{ave}=0.99$; Figure 3c; Figure S2c). We found a single LRB backcross (hybridised with OB) in the Western Saline River in the LRB range (data not shown; Figure S2c). At $K=8$, patterns of ancestry were well resolved for some clusters, with OB individuals in Little Missouri River, Caddo River, and Ouachita River assigning mostly to one cluster ($q_{ave}=0.97$) and OB individuals in Eastern Saline River assigning to another cluster ($q_{ave}=0.95$), with some allele sharing between these two clusters in Eastern Saline River. NB individuals also largely assigned to a single cluster ($q_{ave}=0.91$) except for Lee

14724642, 2023, 10, Downloaded from https://onlinelibrary.wiley.com/doi/10.1111/ddi.13759 by Ohio State University University Libraries, Wiley Online Library on [26/03/2026]. See the Terms and Conditions (https://onlinelibrary.wiley.com/terms-and-conditions) on Wiley Online Library for rules of use; OA articles are governed by the applicable Creative Commons License

TABLE 2 Hybrids of Spotted Bass (*Micropterus punctulatus*, SPB) and species in the Smallmouth Bass species complex (SMB-C): Smallmouth Bass (*M. dolomieu*, SMB), Neosho Bass (*M. velox*, NB), Little River Bass (*M.* sp. cf. *dolomieu* Little River, LRB), and Ouachita Bass (*M. c.f. dolomieu* Ouachita River, OB).

					Hybrids (*H*)					
Species	**Stream or lake**	***n***	**SMB-C**	**SPB**	**F_1**	**F_2**	**$BC_{SMB\text{-}C}$**	**BC_{SPB}**	**Total *H***	**Prop. *H* (%)**
SPB	Illinois River	3		3					0	0.00
	Glover River	2		2					0	0.00
	Species totals	5	0	5	0	0	0	0	0	0.00
SMB	Lake Superior	4	4						0	0.00
	Lake Erie	4	4						0	0.00
	Oneida Lake	4	4						0	0.00
	Smith Fork Creek	4	4						0	0.00
	Skiatook Lake	7	7						0	0.00
	Species totals	23	23	0	0	0	0	0	0	0.00
NB	Honey Creek	10	9				1		1	10.00
	Spavinaw Creek	9	9						0	0.00
	Baron Fork	10	10						0	0.00
	Caney Creek	9	9						0	0.00
	Lee Creek	9	8		1				1	11.11
	Species totals	47	45	0	1	0	1	0	2	4.26
LRB	Blackfork Creek	34	31		1		2		3	8.82
	Honobia Creek	23	23						0	0.00
	Little River	5	4				1		1	20.00
	Glover River	52	47				5		5	9.62
	Big Eagle Creek	3	3						0	0.00
	Upper Mountain Fork	35	33				2		2	5.71
	Mountain Fork	15	13				2		2	13.33
	Pero Creek	1	1						0	0.00
	Cossatot River	33	33						0	0.00
	Western Saline River	37	28				9		9	24.32
	Species totals	238	216	0	1	0	21	0	22	9.24
OB	Little Missouri River	39	39						0	0.00
	Caddo River	40	40						0	0.00
	Ouachita River	40	40						0	0.00
	Eastern Saline River	40	38				2		2	5.00
	Species totals	159	157	0	0	0	2	0	2	1.26
	Range-wide totals	472	441	5	2	0	24	0	26	5.51

Note: '*n*' is the total number of fish used in analysis. 'SMB-C' and 'SPB' indicate number of fish assigning to either parental population. 'F_1', 'F_2', '$BC_{SMB\text{-}C}$', and 'BC_{SPB}' indicate the number of hybrids (*H*): F_1, F_2, SMB-C backcrosses and SPB backcrosses respectively. 'Total *H*' is the total number of hybrids per population across categories, and 'Prop. *H*' is the percentage of the population inferred as hybrids of any category ($\frac{\text{Total } H}{n}$). '*Species Totals*' give total fish for each parental or *H* category within species. '*Range-wide Totals*' give overall total fish for each parental or *H* category across all species. Blank cells indicate a value of '0', but zeros are explicitly listed in the '*Species Totals*' row for each species.

Creek, which was not well-resolved. In the LRB range, Blackfork Creek individuals assigned largely to a single cluster ($q_{ave}=0.86$), and Western Saline River individuals assigned largely to another cluster ($q_{ave}=0.74$), but neither site was well-resolved. All other stream sites in the LRB range exhibited highly variable proportions of ancestry from two distinct clusters along with some allele sharing with other LRB clusters (Figure 3d; Figure S4).

3.3 | Introgression in the Smallmouth Bass species complex (SMB-C)

Among individuals identified as hybrids between SPB and SMB-C, hybrid index varied between 0.49 and 0.91, with values closer to 1.00 indicating greater allelic contribution from SMB-C. Interspecific heterozygosity was similarly variable, ranging from 0.20 to 1.00

14724642, 2023, 10, Downloaded from https://onlinelibrary.wiley.com/doi/10.1111/ddi.13759 by Ohio State University University Libraries, Wiley Online Library on [26/03/2026]. See the Terms and Conditions (https://onlinelibrary.wiley.com/terms-and-conditions) on Wiley Online Library for rules of use; OA articles are governed by the applicable Creative Commons License

TABLE 3 Hybrids of Smallmouth Bass (*Micropterus dolomieu*; SMB) and species native to the Central Interior Highlands: Neosho Bass (*M. velox*, NB), Little River Bass (*M.* sp. cf. *dolomieu* Little River, LRB), and Ouachita Bass (*M. c.f. dolomieu* Ouachita River, OB).

					Hybrids (*H*)					
Species	Stream or lake	*n*	CIH	SMB	F_1	F_2	BC_{CIH}	BC_{SMB}	Total *H*	Prop. *H* (%)
SMB	Lake Superior	4		4						0.00
	Lake Erie	4		4						0.00
	Oneida Lake	4		4						0.00
	Smith Fork Creek	4		4						0.00
	Skiatook Lake	7		7						0.00
	Species totals	23	0	23	0	0	0	0	0	0.00
NB	Honey Creek	9	8				1		1	11.11
	Spavinaw Creek	9	6				3		3	33.33
	Baron Fork	10	9				1		1	10.00
	Caney Creek	9	9							0.00
	Lee Creek	8	8							0.00
	Species totals	45	40	0	0	0	5	0	5	11.11
LRB	Blackfork Creek	31	31							0.00
	Honobia Creek	23	23							0.00
	Little River	4	4							0.00
	Glover River	47	47							0.00
	Big Eagle Creek	3	3							0.00
	Upper Mountain Fork	33	25			3	5		8	24.24
	Mountain Fork	13	6			1	6		7	53.85
	Pero Creek	1	1							0.00
	Cossatot River	33	33							0.00
	Western Saline River	28	28							0.00
	Species totals	216	201	0	0	4	11	0	15	6.94
OB	Little Missouri River	39	39							0.00
	Caddo River	40	40							0.00
	Ouachita River	40	38				2		2	5.00
	Eastern Saline River	38	38							0.00
	Species totals	157	155	0	0	0	2	0	2	1.27
	Range-wide totals	441	396	23	0	4	18	0	22	4.99

Note: '*n*' is the total number of fish used in analysis. 'CIH' and 'SMB' indicate number of fish assigning to either parental population. 'F_1', 'F_2', 'BC_{CIH}' and 'BC_{SMB}' indicate the number of hybrids (*H*): F_1, F_2, CIH backcrosses, and SMB backcrosses, respectively. 'Total *H*' is the total number of hybrids per population across categories, and 'Prop. *H*' is the percentage of the population inferred as hybrids of any category ($\frac{\text{Total } H}{n}$). '*Species Totals*' give total fish for each parental or *H* category within species. '*Range-wide Totals*' give overall total fish for each parental or *H* category across all species. Blank cells indicate a value of '0', but zeros are explicitly listed in the '*Species Totals*' row for each species.

(Figure 4a). Inferred F_1 hybrids possessed nearly equivalent contributions from both parental populations (0.49–0.53) and high interspecific heterozygosity (0.93–1.00), but inferred SMB-C backcrosses varied substantially in both metrics (Figure 4a).

For hybrids between SMB and species native to the CIH, hybrid index varied between 0.45–1.00, with values closer to 1.00 indicating greater allelic contribution from CIH. Interspecific heterozygosity varied from 0.00 to 0.39 (Figure 4b). Inferred F_2 hybrids had different hybrid index values (0.62–1.00) and variable interspecific heterozygosity (0.03–0.36; Figure 4b).

4 | DISCUSSION

Our assessment of two endemic, basin-restricted species in the Ouachita Mountains (Little River Bass, LRB; and Ouachita Bass, OB) revealed genetic differentiation and only marginal amounts of hybridisation and introgression with other species in the Smallmouth Bass species complex (SMB-C)—including Smallmouth Bass (SMB) and Neosho Bass (NB)—and with naturally sympatric Spotted Bass (SPB). Low introgression among LRB, OB, and NB suggests that contemporary effects from past stockings are slight. Because stocking

14724642, 2023, 10, Downloaded from https://onlinelibrary.wiley.com/doi/10.1111/ddi.13759 by Ohio State University University Libraries, Wiley Online Library on [26/03/2026]. See the Terms and Conditions (https://onlinelibrary.wiley.com/terms-and-conditions) on Wiley Online Library for rules of use; OA articles are governed by the applicable Creative Commons License

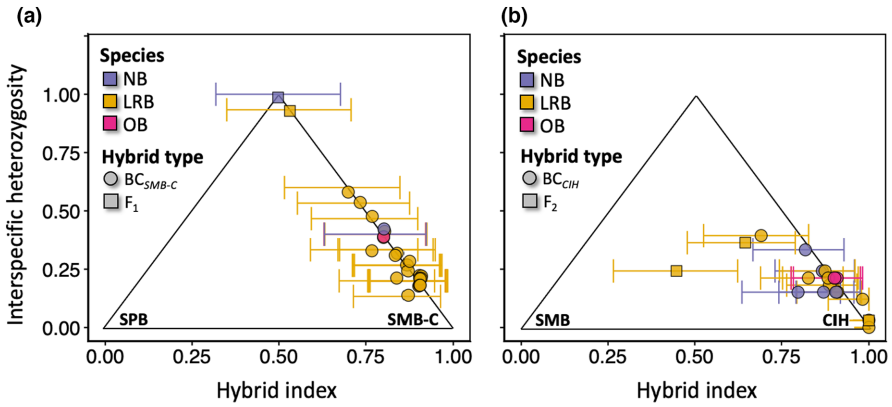

FIGURE 4 Triangle plots depicting regression of interspecific heterozygosity on hybrid index for putative hybrids between (a) Spotted Bass (*Micropterus punctulatus*, SPB) and the Smallmouth Bass species complex (SMB-C) and (b) Smallmouth Bass (*M. dolomieu*, SMB) and species in the Central Interior Highlands. Individuals are colored by species native to the CIH (Neosho Bass, *M. velox*, NB; Little River Bass, *M.* sp. cf. *dolomieu* Little River, LRB; and Ouachita Bass, *M.* sp. cf. *dolomieu* Ouachita River, OB), and shapes indicate hybrid type (BC indicates 'Backcross').

has been a practice for nearly 200 years (Long et al., 2015) and with limited documentation, past stocking events cannot be completely catalogued, but our data suggest any stocking events that may have occurred were rarely successful within streams. In situations where stocking was maximised for success, such as in reservoirs with lentic-adapted populations (e.g. Broken Bow Lake and Ouachita Lake), we detected SMB introgression in the streams directly connected to those reservoirs. As a result, the distinct genomic composition of each LRB and OB species remains relatively intact.

Introgression of SPB ancestry in the CIH was surprising. SPB introgression was extensive in the LRB range, most notably in the Little River (20% hybrids), Glover River (~10%), Mountain Fork (~13%) and Western Saline River (~24%; Figure 3a). Hybridisation is common in nature (Schumer et al., 2016) and occurs among black basses (Koppelman, 2015), but it has mostly been observed in black basses when non-native populations have been stocked. When stocked outside their indigenous range, non-native SPB introgression into a SMB genomic background can be substantial (up to 48%) depending on environmental conditions (Koppelman, 1994, 2015). However, natural hybridisation is thought to be relatively rare in sympatric species (e.g. Gunn et al., 2020). We are unaware of studies documenting hybridisation among sympatric species at the levels we detected.

Heterogeneous admixture with SPB and the presence of SMB-C backcrosses in the Ouachita Mountains suggest that hybridisation is unabated by postzygotic barriers, as is typical for the genus (Koppelman, 2015). We found only two F_1 hybrids and no SPB backcrosses, and we found highly variable interspecific heterozygosity, likely indicating a range of earlier- (high interspecific heterozygosity) to later-generation (low interspecific heterozygosity) hybrids. These patterns suggest that native SMB-C genomic ancestry may be favoured in the CIH. Although limited, hybridisation and introgression in these systems appear to be facilitated by unknown forces. The Glover and Western Saline rivers are categorised by highly flashy flow regimes, with periods of limited to no water flow lasting 2–50 days per year (Leasure et al., 2016). Such conditions could facilitate interbreeding if the two species intermittently co-occur in abnormally high densities (Bolnick, 2009). Recent surveys in the Glover River quantified co-occurrence levels for LRB and SPB, with SPB density outnumbering LRB by a factor of 2.75 in the middle reaches of the stream, but greater density of LRB in lower stream reaches by a factor of 9.5 (Starks et al., 2017). The Glover River's flashy flow regime has been implicated in LRB recruitment failure (Brewer & Long, 2015), and our results provide some evidence it may also influence admixture between sympatric black basses. For instance, during spawning, flashy systems would favour spawning in habitats less susceptible to water level fluctuations, such as pools, potentially clustering nests closer together, which has been observed for NB (Miller & Brewer, 2021). In sunfishes (*Lepomis*), sister group to the black basses, nest clustering has been found to foster hybridisation (Jennings & Philipp, 2002). Elevated rates of mixing could be associated with climate change-induced increases in flow variability (Taylor et al., 2019), but background rates of hybridisation in these systems do not currently exist for testing.

Other ecological and anthropogenic factors, including disturbance associated with human development, may interact with flow regime or act independently to influence interspecific reproductive behaviour or physiology. Changes in the water chemical environment, for example, were shown to significantly impair conspecific mate recognition in female swordtail fish (*Xiphophorus birchmanni*) via the disruption of chemoreception (odour preference; Fisher et al., 2006). For black basses, mate recognition includes visual cues through colour changes and increased contrast with dark (Enriquez et al., 2016). Turbidity can influence the expression of certain colours in fish (Atkinson, 2016), potentially affecting mate recognition. Although the influence of turbidity on hybridisation has not been assessed directly, land-use has been shown to correlate with rates of hybridisation in Bartram's Bass (*M.* sp. cf. *coosae*; Peoples et al., 2021). For this species, instances of pure Bartram's Bass were more prevalent in streams with higher proportions of forested land

14724642, 2023, 10, Downloaded from https://onlinelibrary.wiley.com/doi/10.1111/ddi.13759 by Ohio State University University Libraries, Wiley Online Library on [26/03/2026]. See the Terms and Conditions (https://onlinelibrary.wiley.com/terms-and-conditions) on Wiley Online Library for rules of use; OA articles are governed by the applicable Creative Commons License

cover in the watershed. Conversely, greater instances of hybrids with the non-native Alabama Bass (*M. henshalli*) were associated with watersheds with higher proportions of agriculture land cover. Land-use change, such as conversion of forests to agriculture, can increase turbidity in streams (e.g. Tahiru et al., 2020). Elevated hybridisation rates between sympatric congeners may therefore be partially explained by turbidity-induced problems with mate recognition. More research is needed to draw connections between land-use change and turbidity in the Ouachita Mountains, along with experiments to explicitly test the effect of water clarity on reproductive behaviour and hybridisation frequency between native congeners.

Incidences of non-native SMB introgression in the CIH were limited to watersheds where stocking has occurred, especially in reservoirs (Lake Tenkiller, Broken Bow Lake and Ouachita Lake), in line with expectations in other situations (Gunn et al., 2020, 2022; Taylor, Long, et al., 2018). We intentionally focused our sampling efforts on portions of mainstem tributaries upstream of reservoirs to maximise the probability of locating fish with native ancestry. We found evidence of introgression several kilometres upstream of Lake Tenkiller in the Illinois River system (Honey Creek, Spavinaw Creek, Caney Creek, and Baron Fork; NB native range); upstream of the Mountain Fork system (upper Mountain Fork [~24%] and the mainstem river [~54%]; LRB range); and upstream of Ouachita Lake in the Ouachita River (~5%, OB native range; Figure 3b). However, the frequency of introgression was not consistent among sites within systems. Caney Creek, a small tributary of the Illinois River, showed no signature of admixture, compared with hybridisation frequencies of 11.11%, 33.33% and 10.00% in Honey Creek, Spavinaw Creek, and Baron Fork Creek, respectively, despite being nearly equidistant from Lake Tenkiller. We hypothesise that stream size may be a natural barrier to introgression from non-native SMB, whose origins generally include larger rivers as natural habitat (i.e. Tennessee lake-strain SMB; Taylor, Long, et al., 2018). Sampling additional tributaries to reservoirs where Tennessee lake-strain SMB have been stocked (e.g. Blakely Creek, Irons Fork, South Fork and North Fork inflowing to Ouachita Lake) would help test hypotheses of native CIH SMB-C species to be better adapted to small streams. SMB-C species in the CIH are considered fluvial-specialists (Brewer & Long, 2015), intolerant of reservoir conditions. In fact, it was lack of SMB in these reservoirs that prompted state agencies to stock non-native 'strains' to establish populations for angling (Boxrucker et al., 2004; Stark & Echelle, 1998).

The relative lack of SMB hybrids in the LRB and OB native ranges, given a history of stocking in the region and a propensity for interspecific hybridisation among black basses, could be explained by several factors. Ecoregional boundaries formed over millennia are likely responsible for speciation and population structuring in the CIH (Kim et al., 2022; Mayden, 1985) and limit introgression of non-native alleles. In fact, the geography of the Ouachita Mountains may help reduce spread of introduced SMB and their hybrids, because patches of suitable habitat in upland streams are connected only at points further downstream in the lowlands of the area, which is largely unsuitable for SMB-C species. Another possibility is that native LRB and OB may outcompete non-native SMB in high gradient fluvial habitats in the Ouachita Mountains (i.e. small streams) compared to low gradient habitats like large rivers and impoundments. In fact, there is mounting genomic evidence of local adaptation across the CIH (Gunn et al., 2022) and significant physiological differences, such as increased thermal tolerance in the lineages occupying the Ouachita Mountains (Brewer et al., 2022). Full descriptions of the morphological, physiological and ecological differences among species will be critical for identifying adaptations in the CIH and understanding their role in mediating interspecific gene flow. It is also important to note possible ascertainment bias derived from specimen sampling and SNP panel design. We intentionally collected fish from the putative native ranges of each species and based on external morphology. Although we did not exclude fin clips from fish with marginal variations in colour and patterning, we may have excluded some individuals with pronounced yet unknown hybrid phenotypes which may appear in earlier generation hybrid offspring. Additionally, the SNP panel used for genotyping (Long et al., 2021) is nuanced since it was constructed with a separate, limited set of fishes, and it therefore may not represent the full breadth of genomic variation among black bass species in the CIH. Both sampling strategy and panel design could have resulted in underestimation of hybrid frequencies.

Lack of widespread introgression with SMB in the CIH requires careful consideration and a precautionary approach to additional stocking in the region. Many studies point to habitat alteration and propagule pressure as dynamic mechanisms that can influence rates and outcomes of species invasions and introgression events (e.g. Bangs et al., 2016; Bennett et al., 2010; Lockwood et al., 2005; Pringle et al., 2000; von Holle & Simberloff, 2005). Even among black basses, anthropogenic habitat alteration can increase introgression rates (Koppelman, 1994). Sources of non-native propagules, such as impoundments stocked with non-native black basses, have also been implicated in increased invasion and introgression rates of black basses across riverscapes (Judson et al., 2021; Peoples et al., 2021; Taylor, Tringali, et al., 2018). Such mechanisms, along with hydrological changes associated with climate change in the region, could alter introgression rates from their observed rates in the present study. Fine-scale sampling and monitoring in systems with known sources of non-natives (e.g. Broken Bow Lake in the LRB range) is warranted, along with establishing genetic management units that could help conserve remaining genetic biodiversity within each member of the species complex.

4.1 | Conclusions

Our findings represent an important baseline of biodiversity within the SMB-C, and the first such study focused on the LRB and OB. The presence of some recent hybrids (i.e. F_1 and F_2) and early- and later-generation backcrosses in populations of LRB and OB confirms that species in the SMB-C can readily

14724642, 2023, 10, Downloaded from https://onlinelibrary.wiley.com/doi/10.1111/ddi.13759 by Ohio State University University Libraries, Wiley Online Library on [26/03/2026]. See the Terms and Conditions (https://onlinelibrary.wiley.com/terms-and-conditions) on Wiley Online Library for rules of use; OA articles are governed by the applicable Creative Commons License

hybridise and may be susceptible to the homogenising effects of gene flow. As basin-restricted species, they may be especially vulnerable to the effects of climate and environmental change, which is not unexpected given that nearly all endemic fishes in the Ouachita Mountains ecoregion are threatened or imperilled (Jelks et al., 2008). Yet despite known stocking of SMB in reservoirs throughout the Ouachita Mountains and more broadly across the CIH, introgression of non-native alleles is generally low. If adaptations exist to facilitate maintenance of native alleles in these species, then the effects of past stocking could be ameliorated. Stocking records are sparse, especially in the 1800s when black bass taxonomy was poorly understood and stocking was widespread (Long et al., 2015). The degree to which possible historical stockings have influenced genomic variation is largely unknown. Furthermore, our SNP panel was designed to diagnose SMB-C species (Long et al., 2021) and detect allele-sharing but is not appropriate for estimating population genetic diversity metrics or identifying genes under selection. This level of information would be useful to understand the demographic history of populations, specifically whether past stockings failed to establish individuals or if those individuals contained maladapted alleles.

ACKNOWLEDGEMENTS

We thank Trevor Starks and Anthony Rodger with the Oklahoma Department of Wildlife Conservation, as well as Joel Bjornen, Colt Holley, Tyler Farling, and Lauren Seguy, for help with field collections. This study was performed, in part, under the auspices of Oklahoma State University's Institutional Animal Care and Use Committee's protocol # AG-13-8. Any use of trade, firm, or product names is for descriptive purposes only and does not imply endorsement by the U.S. Government.

FUNDING INFORMATION

Funding was provided by the Oklahoma Cooperative Fish and Wildlife Research Unit (U.S. Geological Survey, Oklahoma State University, Oklahoma Department of Wildlife Conservation, Wildlife Management Institute, and U.S. Fish and Wildlife Service, cooperating).

CONFLICT OF INTEREST STATEMENT

The authors declare no conflicts of interest.

PEER REVIEW

The peer review history for this article is available at https://www.webofscience.com/api/gateway/wos/peer-review/10.1111/ddi.13759.

DATA AVAILABILITY STATEMENT

Raw SNP calls (*.vcf*) and metadata (*.xlsx*) for all samples are available on Dryad (https://doi.org/10.5061/dryad.k6djh9wbs). All code for reproducing data analyses is available on GitHub (https://github.com/jcg5g9/SNOLH_Genomics).

ORCID

Joe C. Gunn https://orcid.org/0000-0001-6916-8678
Andrew T. Taylor https://orcid.org/0000-0002-8491-9967
James M. Long https://orcid.org/0000-0002-8658-9949

REFERENCES

Altukhov, Y. P., & Salmenkova, E. A. (1987). Stock transfer relative to natural organization, management, and conservation of fish populations. In N. Ryman & F. Utter (Eds.), *Population genetics and fishery management* (pp. 333–344). University of Washington Press.

Anderson, E. C., & Thompson, E. A. (2002). A model-based method for identifying species hybrids using multilocus genetic data. *Genetics*, *160*, 1217–1229. https://doi.org/10.1093/genetics/160.3.1217

Atkinson, T. (2016). *The relationship between turbidity and carotenoid-based coloration of centrarchid fishes in urban streams*. School of Environment and Natural Resources [Undergraduate honors thesis, the Ohio State University]. http://hdl.handle.net/1811/76658

Avise, J. C. (2010). Perspective: Conservation genetics enters the genomics era. *Conservation Genetics*, *11*(2), 665–669. https://doi.org/10.1007/s10592-009-0006-y

Avise, J. C., Pierce, P. C., van den Avyle, M. J., Smith, M. H., Nelson, W. S., & Asmussen, M. A. (1997). Cytonuclear introgressive swamping and species turnover of bass after an introduction. *The Journal of Heredity*, *88*, 14–20. https://doi.org/10.1093/oxfordjournals.jhered.a023049

Bagley, J. C., Mayden, R. L., Roe, K. J., Holznagel, W., & Harris, P. M. (2011). Congeneric phylogeographical sampling reveals polyphyly and novel biodiversity within black basses (Centrarchidae: *Micropterus*). *Biological Journal of the Linnean Society*, *104*, 346–363. https://doi.org/10.1111/j.1095-8312.2011.01720.x

Baker, W. H., Blanton, R. E., & Johnston, C. E. (2013). Diversity within the Redeye Bass, *Micropterus coosae* (Perciformes: Centrarchidae) species group, with descriptions of four new species. *Zootaxa*, *3635*, 379–401. https://doi.org/10.11646/zootaxa.3635.4.3

Bangs, M. R., Douglas, M. R., Thompson, P., & Douglas, M. E. (2016). Anthropogenic impacts facilitate native fish hybridization in the Bonneville Basin of Western North America. *Transactions of the American Fisheries Society*, *146*(1), 16–21. https://doi.org/10.1080/00028487.2016.1235611

Bennett, S. N., Olson, J. R., Kershner, J. L., & Corbett, P. (2010). Propagule pressure and stream characteristics influence introgression: Cutthroat and rainbow trout in British Columbia. *Ecological Applications*, *20*, 263–277. https://doi.org/10.1890/08-0441.1

Bickford, D., Lohman, D. J., Sodhi, N. S., Ng, P. K. L., Meier, R., Winker, K., Ingram, K. K., & Das, I. (2007). Cryptic species as a window on diversity and conservation. *Trends in Ecology & Evolution*, *22*, 148–155. https://doi.org/10.1016/j.tree.2006.11.004

Bolnick, D. I. (2009). Hybridization and speciation in centrarchids. In S. J. Cooke & D. P. Philipp (Eds.), *Centrarchid fishes: Diversity, biology, and conservation* (pp. 39–69). Blackwell Publishing Ltd. https://doi.org/10.1002/9781444316032.ch2

Borden, C. W., & Krebs, R. A. (2009). Phylogeography and postglacial dispersal of Smallmouth Bass (*Micropterus dolomieu*) into the Great Lakes. *Canadian Journal of Fisheries and Aquatic Sciences*, *66*, 2142–2156. https://doi.org/10.1139/F09-155

Boxrucker, J., Echelle, A. A., & Van Den Bussche, R. A. (2004). *Determining the degree of hybridization in the Smallmouth Bass population of Broken Bow Reservoir and the Mountain Fork River* (p. F-50-R, Project 19). Oklahoma Department of Wildlife Conservation. https://digitalprairie.ok.gov/digital/collection/stgovpub/id/10802/

Brewer, S. K., & Long, J. M. (2015). Biology and ecology of the Neosho Smallmouth Bass and the genetically distinct Ouachita lineage. In M. D. Tringali, J. M. Long, T. W. Birdson, & M. S. Allen (Eds.), *Black*

14724642, 2023, 10, Downloaded from https://onlinelibrary.wiley.com/doi/10.1111/ddi.13759 by Ohio State University University Libraries, Wiley Online Library on [26/03/2026]. See the Terms and Conditions (https://onlinelibrary.wiley.com/terms-and-conditions) on Wiley Online Library for rules of use; OA articles are governed by the applicable Creative Commons License

bass diversity: Multidisciplinary science for conservation (pp. 281–296). American Fisheries Society Publishing. https://pubs.er.usgs.gov/publication/70154897

Brewer, S. K., Mollenhauer, R., Alexander, J., & Moore, D. (2022). Critical thermal maximum values for stream fishes, including distinct populations of Smallmouth Bass. *North American Journal of Fisheries Management*, *42*, 352–360. https://doi.org/10.1002/nafm.10749

Brewer, S. K., & Orth, D. J. (2015). Smallmouth Bass *Micropterus dolomieu* Lacépède, 1802. In M. D. Tringali, J. M. Long, T. W. Birdsong, & M. S. Allen (Eds.), *Black bass diversity: Multidisciplinary science for conservation* (pp. 9–26). American Fisheries Society Publishing. https://www.researchgate.net/publication/281206490_Smallmouth_Bass_Micropterus_dolomieu_Lacepede_1802

Culver, D. C., Kane, T. C., & Fong, D. W. (1995). *Adaptation and natural selection in caves: The evolution of Gammarus minus*. Harvard University Press. https://doi.org/10.4159/harvard.9780674419070

Culver, D. C., & Pipan, T. (2009). *The biology of caves and other subterranean habitats*. Oxford University Press. https://doi.org/10.1093/oso/9780198820765.001.0001

Enriquez, E. J., Gelwick, F. P., & Packard, J. M. (2016). Reproductive seasonality, courtship and nesting in Guadalupe bass (*Micropterus treculii*). *The American Midland Naturalist*, *176*, 173–185. https://doi.org/10.1674/0003-0031-176.2.173

Evanno, G., Regnaut, S., & Goudet, J. (2005). Detecting the number of clusters of individuals using the software STRUCTURE: A simulation study. *Molecular Ecology*, *14*, 2611–2620. https://doi.org/10.1111/j.1365-294X.2005.02553.x

Fisher, H. S., Wong, B. B. M., & Rosenthal, G. G. (2006). Alteration of the chemical environment disrupts communication in a freshwater fish. *Proceedings of the Royal Society B*, *273*, 1187–1193. https://doi.org/10.1098/rspb.2005.3406

Francis, R. M. (2017). Pophelper: An R package and web app to analyze and visualize population structure. *Molecular Ecology Resources*, *17*, 27–32. https://doi.org/10.1111/1755-0998.12509

Funk, C. W., Caminer, M., & Ron, S. R. (2012). High levels of cryptic species diversity uncovered in Amazonian frogs. *Proceedings of the Royal Society B*, *279*, 1806–1814. https://doi.org/10.1098/rspb.2011.1653

Gagen, C. J., Standage, R. W., & Stoeckel, J. N. (1998). Ouachita madtom (*Noturus lachneri*) metapopulation dynamics in intermittent Ouachita mountain streams. *Copeia*, *1998*, 874–882. https://doi.org/10.2307/1447334

Garrick, R. C., Banusiewicz, J. D., Burgess, S., Hyseni, C., & Symula, R. E. (2019). Extending phylogeography to account for lineage fusion. *Journal of Biogeography*, *46*, 268–278. https://doi.org/10.1111/jbi.13503

Gompert, Z., & Buerkle, A. C. (2010). Introgress: A software package for mapping components of isolation in hybrids. *Molecular Ecology Resources*, *10*, 378–384. https://doi.org/10.1111/j.1755-0998.2009.02733.x

Gunn, J. C., Berkman, L. K., Koppelman, J., Taylor, A. T., Brewer, S. K., Long, J. M., & Eggert, L. S. (2020). Complex patterns of genetic and morphological differentiation in the Smallmouth Bass subspecies (*Micropterus dolomieu dolomieu* and *M. d. velox*) of the Central Interior Highlands. *Conservation Genetics*, *21*, 891–904. https://doi.org/10.1007/s10592-020-01295-1

Gunn, J. C., Berkman, L. K., Koppelman, J., Taylor, A. T., Brewer, S. K., Long, J. M., & Eggert, L. S. (2022). Genomic divergence, local adaptation, and complex demographic history may inform management of a popular sportfish species complex. *Ecology and Evolution*, *12*, e9370. https://doi.org/10.1002/ece3.9370

Hafs, A. W., Gagen, C. J., & Whalen, J. K. (2010). Smallmouth Bass summer habitat use, movement, and survival in response to low flow in the Illinois Bayou, Arkansas. *North American Journal of Fisheries Management*, *30*, 604–612. https://doi.org/10.1577/m08-183.1

Harvey, B. C., & Stewart, A. J. (1991). Fish size and habitat depth relationships in headwater streams. *Oecologia*, *87*, 336–342. https://doi.org/10.1007/BF00634588

Henshall, J. A. (1881). *Book of the black bass: Comprising its complete scientific and life history together with a practical treatise on angling and fly fishing and a full description of tools, tackle, and implements*. Robert Clarke & Co

Hines, M. S. (1975). *Flow duration and low-frequency determinations of selected Arkansas streams* (12). Arkansas Geological Commission Water Resources Circular. https://www.geology.arkansas.gov/publication/water_circulars/WRC-12-water-resources-circular.html

Homan, J. M., Girondo, N. M., & Gagen, C. J. (2005). Quantification and prediction of stream dryness in the Interior Highlands. *Journal of the Arkansas Academy of Science*, *59*, 95–100. https://scholarworks.uark.edu/jaas/vol59/iss1/14/

Hubbs, C. L., & Bailey, R. M. (1940). A revision of the black basses (*Micropterus* and *Huro*) with descriptions of four new forms. *Miscellaneous Publications of the University of Michigan Museum of Zoology*, *48*, 1–52.

Jakobsson, M., Edge, M. D., & Rosenberg, N. A. (2013). The relationship between FST and the frequency of the most frequent allele. *Genetics*, *193*, 515–528. https://doi.org/10.1534/genetics.112.144758

Jansson, R., & Dynesius, M. (2002). The fate of clades in a world of recurrent climatic change: Milankovitch oscillations and evolution. *Annual Review of Ecology and Systematics*, *33*, 741–777. https://doi.org/10.1146/annurev.ecolsys.33.010802.150520

Jelks, H. L., Walsh, S. J., Burkhead, N. M., Contreras-Balderas, S., Diaz-Pardo, E., Hendrickson, D. A., Lyons, J., Mandrak, N. E., McCormick, F., Nelson, J. S., Platania, S. P., Porter, B. A., Renaud, C. B., Schmitter-Soto, J. J., Taylor, E. B., & Warren, M. L. (2008). Conservation status of imperiled north American freshwater and diadromous fishes. *Fisheries*, *33*, 372–407. https://doi.org/10.1577/1548-8446-33.8.372

Jennings, M. J., & Philipp, D. P. (2002). Alternative mating tactics in sunfishes (Centrarchidae): A mechanism for hybridization? *Copeia*, *2002*, 1102–1105. https://doi.org/10.1643/0045-8511(2002)002[1102:AMTISC]2.0.CO;2

Jombart, T. (2008). Adegenet: A R package for the multivariate analysis of genetic markers. *Bioinformatics*, *24*, 1403–1405. https://doi.org/10.1093/bioinformatics/btn129

Jombart, T., & Ahmed, I. (2011). Adegenet 1.3.1: New tools for the analysis of genome-wide SNP data. *Bioinformatics*, *27*, 3070–3071. https://doi.org/10.1093/bioinformatics/btr521

Jombart, T., Devillard, S., & Balloux, F. (2010). Discriminant analysis of principal components: A new method for the analysis of genetically structured populations. *BMC Genetics*, *11*, 1–15. https://doi.org/10.1186/1471-2156-11-94

Judson, E., Darden, T. L., Farrae, D., Leitner, J., & Peoples, B. K. (2021). Nesting microhabitat use and hybridization of endemic Bartram's bass in Savannah River tributaries. *Ecology of Freshwater Fish*, *30*, 306–319. https://doi.org/10.1111/eff.12585

Kim, D., Bauer, B. H., & Near, T. J. (2021). Introgression and species delimitation in the Longear sunfish *Lepomis megalotis* (Teleostei: Percomorpha: Centrarchidae). *Systematic Biology*, *71*, 273–285. https://doi.org/10.1093/sysbio/syab029

Kim, D., Taylor, A. T., & Near, T. J. (2022). Phylogenomics and species delimitation of the economically important black basses (*Micropterus*). *Scientific Reports*, *12*, 9113. https://doi.org/10.1038/s41598-022-11743-2

Koppelman, J. B. (1994). Hybridization between Smallmouth Bass, *Micropterus Dolomieu*, and spotted bass, *M. punctulatus*, in the Missouri River system, Missouri. *Copeia*, *1994*, 204–210. https://doi.org/10.2307/1446686

14724642, 2023, 10, Downloaded from https://onlinelibrary.wiley.com/doi/10.1111/ddi.13759 by Ohio State University University Libraries, Wiley Online Library on [26/03/2026]. See the Terms and Conditions (https://onlinelibrary.wiley.com/terms-and-conditions) on Wiley Online Library for rules of use; OA articles are governed by the applicable Creative Commons License

Koppelman, J. B. (2015). Black bass hybrids: A natural phenomenon in an unnatural world. In M. D. Tringali, J. M. Long, T. W. Birdson, & M. S. Allen (Eds.), *Black bass diversity: Multidisciplinary science for conservation* (pp. 467–479). American Fisheries Society Publishing. https://doi.org/10.47886/9781934874400.ch35

Leasure, D. R., Magoulick, D. D., & Longing, S. D. (2016). Natural flow regimes of the Ozark-Ouachita Interior Highlands region. *River Research and Applications*, *32*, 18–35. https://doi.org/10.1002/rra.2838

Li, Y. L., & Liu, J. X. (2018). StructureSelector: A web-based software to select and visualize the optimal number of clusters using multiple methods. *Molecular Ecology Resources*, *18*, 176–177. https://doi.org/10.1111/1755-0998.12719

Lockwood, J. L., Cassey, P., & Blackburn, T. (2005). The role of propagule pressure in explaining species invasions. *Trends in Ecology & Evolution*, *20*, 223–228. https://doi.org/10.1016/j.tree.2005.02.004

Long, J. M., Allen, M. S., Porak, W. F., & Suski, C. D. (2015). A historical perspective of black bass management in the United States. In M. D. Tringali, J. M. Long, T. W. Birdson, & M. S. Allen (Eds.), (pp. 99–122). Black bass diversity: Multidisciplinary science for conservation. http://fishlab.nres.illinois.edu/Reprints/Long_et_al_History_Bass.pdf

Long, J. M., Taylor, A. T., & Buonaccorsi, V. (2021). A conservation-oriented SNP panel for Smallmouth Bass (*Micropterus dolomieu*), with emphasis on Interior Highlands lineages. *Conservation Genetics Resources*, *13*, 47–59. https://doi.org/10.1007/s12686-020-01170-8

Mayden, R. L. (1985). Biogeography of Ouachita Highland fishes. *The Southwestern Naturalist*, *30*, 195–211. https://doi.org/10.2307/3670734

Miller, A. D., & Brewer, S. K. (2021). Riverscape nesting dynamics of Neosho Smallmouth Bass: To cluster or not to cluster? *Diversity and Distributions*, *27*, 1005–1018. https://doi.org/10.1111/ddi.13250

Niemiller, M. L., Near, T. J., & Fitzpatrick, B. M. (2012). Delimiting species using multilocus data: Diagnosing cryptic diversity in the southern cavefish, *Typhlichthys subterraneus* (Teleostei: Amblyopsidae). *Evolution*, *66*, 846–866. https://doi.org/10.1111/j.1558-5646.2011.01480.x

Peoples, B. K., Judson, E., Darden, T. L., Farrae, D. J., Kubach, K., Leitner, J., & Scott, M. C. (2021). Modeling distribution of endemic Bartram's bass *Micropterus* sp. cf. *coosae*: Disturbance and proximity to invasion source increase hybridization with invasive Alabama bass. *North American Journal of Fisheries Management*, *41*, 1309–1321. https://doi.org/10.1002/nafm.10637

Port, P., Buckingham, J., DiCenzo, V., Fendley, D., Hopkins, K., Middaugh, C., Quinn, J., & Todd, S. (2021). *Stream Smallmouth Bass management plan* (3rd ed.). Arkansas Game and Fish Commission. https://doi.org/10.13140/RG.2.2.22329.70245

Pringle, C. M., Freeman, M. C., & Freeman, B. J. (2000). Regional effects of hydrologic alterations on riverine macrobiota in the new world: Tropical–temperate comparisons. *Bioscience*, *50*(9), 807. https://doi.org/10.1641/0006-3568(2000)050[0807:reohao]2.0.co;2

Pritchard, J. K., Stephens, M., & Donnelly, P. (2000). Inference of population structure using multilocus genotype data. *Genetics*, *155*, 945–959.

Puechmaille, S. J. (2016). The program structure does not reliably recover the correct population structure when sampling is uneven: Subsampling and new estimators alleviate the problem. *Molecular Ecology Resources*, *16*, 608–627. https://doi.org/10.1111/1755-0998.12512

R Core Team. (2022). *R: A language and environment for statistical computing*. R Foundation for Statistical Computing. https://www.R-project.org/

Schluter, D. (1996). Ecological speciation in postglacial fishes. *Philosophical Transactions of the Royal Society B*, *351*, 807–814. https://doi.org/10.1098/rstb.1996.0075

Schumer, M., Cui, R., Powell, D. L., Rosenthal, G. G., & Andolfatto, P. (2016). Ancient hybridization and genomic stabilization in a swordtail fish. *Molecular Ecology*, *25*, 2661–2679. https://doi.org/10.1111/mec.13602

Soltis, D. E., Morris, A. B., McLachlan, J. S., Manos, P. S., & Soltis, P. S. (2006). Comparative phylogeography of unglaciated eastern North America. *Molecular Ecology*, *15*, 4261–4293. https://doi.org/10.1111/j.1365-294X.2006.03061.x

Stanley, R. R. E., Jeffery, N. W., Wringe, B. F., DiBacco, C., & Bradbury, I. R. (2017). Genepopedit: A simple and flexible tool for manipulating multilocus molecular data in *R*. *Molecular Ecology Resources*, *17*, 12–18. https://doi.org/10.1111/1755-0998.12569

Stark, W. J., & Echelle, A. A. (1998). Genetic structure and systematics of Smallmouth Bass, with emphasis on Interior Highlands populations. *Transactions of the American Fisheries Society*, *127*, 393–416. https://doi.org/10.1577/1548-8659(1998)127<0393:GSASOS>2.0.CO;2

Starks, T. A., Skoog, M., & Rodger, A. W. (2017). *Black bass population dynamics in Glover River, Spring Creek, and Black Fork of the Poteau River, Oklahoma* (Black bass report No. 2, Project F13AF00191). Oklahoma Department of Wildlife Conservation Federal Aid Project.

Tahiru, A. A., Doke, D. A., & Baatuuwie, B. N. (2020). Effect of land use and land cover changes on water quality in the Nawuni Catchment of the White Volta Basin, Northern Region, Ghana. *Applied Water Science*, *10*, 198. https://doi.org/10.1007/s13201-020-01272-6

Taylor, A. T., Long, J. M., Schwemm, M. R., & Brewer, S. K. (2018). Hybridization and genetic structure of Neosho Smallmouth Bass in the Ozark Highlands. *North American Journal of Fisheries Management*, *38*, 1226–1240. https://doi.org/10.1002/nafm.10225

Taylor, A. T., Long, J. M., Tringali, M. D., & Barthel, B. L. (2019). Conservation of black bass diversity: An emerging management paradigm. *Fisheries*, *44*, 20–36. https://doi.org/10.1002/fsh.10187

Taylor, A. T., Tringali, M. D., & Long, J. M. (2018). Shoal Bass hybridization in the Chattahoochee River Basin near Atlanta, Georgia. *Southeastern Association of Fish and Wildlife Agencies*, *2018*, 1–9.

Tringali, M. D., Barthel, B. L., Seyoum, S., & Knight, J. R. (2015). The Choctaw Bass: An undescribed species of *Micropterus* in the Gulf Coastal Plain rivers of Florida. *Transactions of the American Fisheries Society*, *82*, 421–448. https://doi.org/10.47886/9781934874400.ch33

U.S. Fish and Wildlife Service (USFWS). (2016). *National survey of fishing, hunting, and wildlife-associated recreation*. https://www.fws.gov/sites/default/files/documents/news-attached-files/nat_survey2016.pdf

von Holle, B., & Simberloff, D. (2005). Ecological resistance to biological invasion overwhelmed by propagule pressure. *Ecology*, *86*, 3212–3218. https://doi.org/10.1890/05-0427

Wringe, B. F., Stanley, R. R. E., Jeffery, N. W., Anderson, E. C., & Bradbury, I. R. (2017). parallelnewhybrid: An *R* package for the parallelization of hybrid detection using newhybrids. *Molecular Ecology Resources*, *17*, 91–95. https://doi.org/10.1111/1755-0998.12597

BIOSKETCH

Joe C. Gunn is an ecologist and conservation geneticist, interested in using genomics, transcriptomics and epigenetics to address questions about contemporary ecological patterns and their underlying evolutionary drivers. He is currently a postdoctoral associate at the University of Vermont, where he is investigating the role of transgenerational inheritance of epigenetic modifications on the evolution of insecticide resistance in invasive agricultural pests. He ultimately seeks to understand complex ecological dynamics to better preserve biodiversity.

14724642, 2023, 10, Downloaded from https://onlinelibrary.wiley.com/doi/10.1111/ddi.13759 by Ohio State University University Libraries, Wiley Online Library on [26/03/2026]. See the Terms and Conditions (https://onlinelibrary.wiley.com/terms-and-conditions) on Wiley Online Library for rules of use; OA articles are governed by the applicable Creative Commons License

Author contributions: The study was conceptualized and initiated by A. T. Taylor, J. M. Long, J. C. Gunn, A. I. Kern and J. J. Buckingham. A. T. Taylor, J. M. Long, A. I. Kern and J. J. Buckingham collected samples for the project. A. T. Taylor and J. M. Long conducted DNA extractions, sample preparation and data curation. J. C. Gunn conducted statistical analyses and wrote the manuscript. All authors contributed to interpretation of statistical analysis and manuscript preparation.

SUPPORTING INFORMATION

Additional supporting information can be found online in the Supporting Information section at the end of this article.

How to cite this article: Gunn, J. C., Taylor, A. T., Buckingham, J. J., Kern, A. I., & Long, J. M. (2023). Limited hybridisation and introgression despite stocking among endemic Interior Highlands black basses (Centrarchidae: *Micropterus*). *Diversity and Distributions*, *29*, 1299–1314. https://doi.org/10.1111/ddi.13759

14724642, 2023, 10, Downloaded from https://onlinelibrary.wiley.com/doi/10.1111/ddi.13759 by Ohio State University University Libraries, Wiley Online Library on [26/03/2026]. See the Terms and Conditions (https://onlinelibrary.wiley.com/terms-and-conditions) on Wiley Online Library for rules of use; OA articles are governed by the applicable Creative Commons License